SEL-3031 Serial Radio Transceiver

900-MHz Frequency-Hopping, Spread-Spectrum, Serial Encrypting Radio

Major Features and Benefits

- **Dual Radio Operating Modes Provide Flexibility.** Supports point-to-point radio operation for fast teleprotection, distribution automation, distributed generation and economical backup protection. Provides point-to-multipoint (P2MP) radio operation for SCADA and other data gathering from remote locations.
- **Three Ports in One Radio Reduce Costs.** Simultaneously communicates with up to three independent ports and protocols.
- **Low Latency Enables Fast Control.** Transfers control commands with a typical 4.8-millisecond latency with SEL MIRRORED BITS® communications.
- **Strong Security Thwarts Attackers.** Protects critical data and repels malicious attacks with optional encryption card, using session authentication and strong 256-bit Advanced Encryption Standard (AES) technology.
- **Tough Radio Operates in Extreme Conditions.** Is designed, built, and tested for trouble-free operation in extreme temperature, electromagnetic interference, shock, and vibration conditions.
- **No Licensing Reduces Delays and Expenses.** Uses the license-free, 900-MHz ISM band for on-time, on-budget projects.
- **Mounting Options Simplify Installation.** Order your SEL-3031 in one of three different packages: rack-mount, wall-mount, and NEMA 3R prewired radio solution.
- **Multiple Protocols Satisfy Interconnection Requirements.** Communicate with industry-standardized byte-oriented protocols, such as DNP3, Modbus®, SEL MIRRORED BITS communications, IEEE C37.118 Synchrophasors, SEL Fast Messaging, and SEL ASCII.
- **Flexible Serial Port Options Match Integration Needs.** Order serial Port 1 as EIA-232, EIA-485, or optical fiber to easily connect to your existing devices.
- **Simple Settings Streamline Radio Commissioning.** Use ACSELERATOR QuickSet® SEL-5030 Software for all settings.
- **USB Management Port Conveniently Connects to PC.** Make settings changes, verify status information for proper installation, and verify radio performance without affecting the three serial channels.

Product Overview

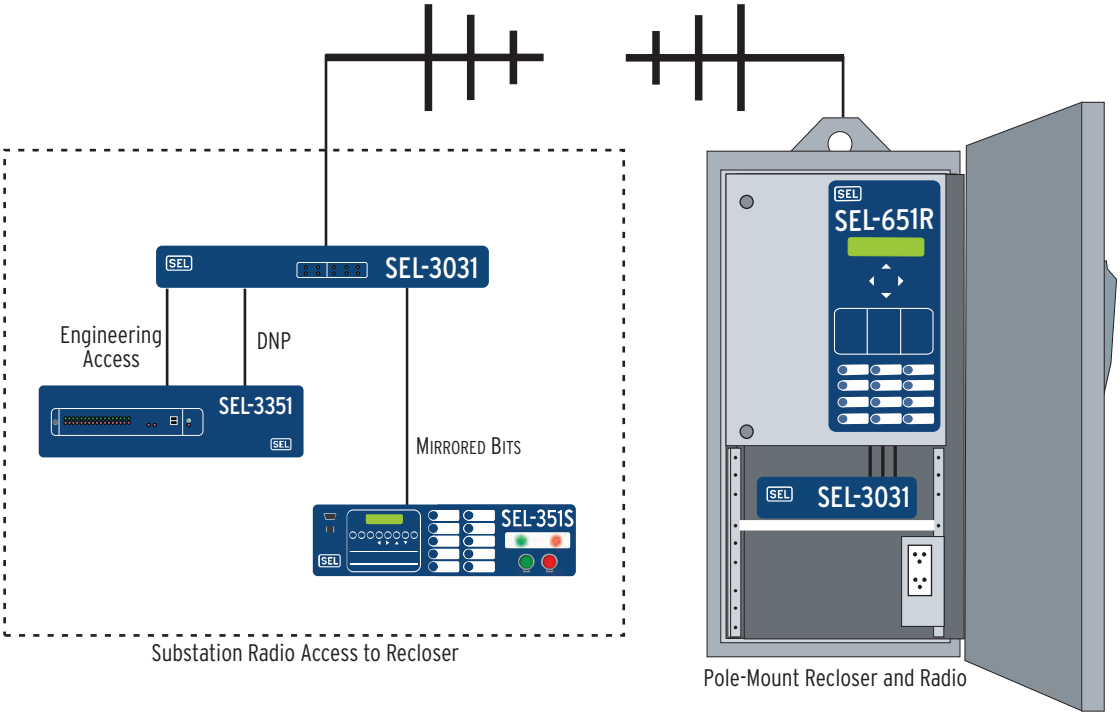

Figure 1 SEL-3031 Product Overview

With the SEL-3031, you no longer need three sets of radios or expensive dedicated fiber-optics to transmit communications over long distances. The SEL-3031 provides three serial wireless interfaces on one device, making it the ideal solution for communications challenges. *Figure 1* illustrates an application option, including DNP3 SCADA information, MIRRORED BITS control for reclosing coordination, and engineering access to the SEL-651R recloser control.

SEL-3031 Base Unit

Standard Features

- Three EIA-232 serial ports
- IRIG-B time-code input
- Power supply
  - Wall mount 9–30 Vdc
  - Rack mount 24/48 Vdc or 125/250 Vdc or Vac
  - NEMA 3R enclosure 125/250 Vac or Vdc, optional backup battery
- Form B alarm contact
- ACSELERATOR QuickSet SEL-5030 Software
- +5 V pin 1 power for external transceivers
- Radio link statistics
- LEDs show protocol pass-through states per port on transmit and receive

Optional Features

- Rack mount with internal substation power supply
- EIA-485 Port 1
- Fiber-optic Port 1 (SEL-2812 and SEL-9220-compatible)
- SEL-3044 Encryption Card (256-bit AES encryption)

SEL-3031 Point-to-Point Applications

In a point-to-point application, SEL-3031 radios provide a direct connection between two devices. *Figure 2* shows an example point-to-point application. In this application, the communications path is a single line-of-sight, making directional antennas the preferred solution.

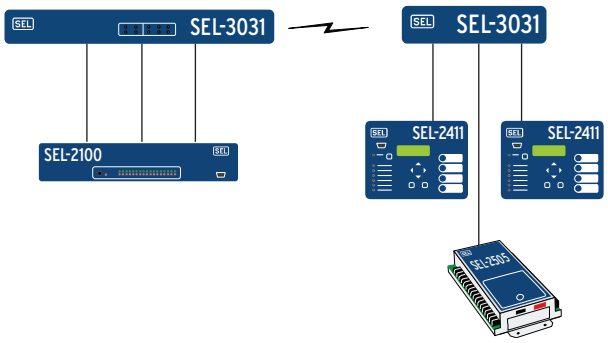

Figure 2 Point-to-Point Communication

Point-to-point configurations are very useful when high-speed data are needed. The SEL-2100 processes and transfers all contact information passed through the SEL-2411 units and the SEL-2505.

Recloser Control Access

With three serial ports on the SEL-3031 you can poll SCADA data, operate or control reclosing remotely, and include engineering access to the oscillographic event reports (see *Figure 3*). Normally, it would require installing multiple radios at one location to have access to all this information as well as rapid operation speed. The SEL-3031 allows you to install one radio and choose the type of information and protocol necessary for the application.

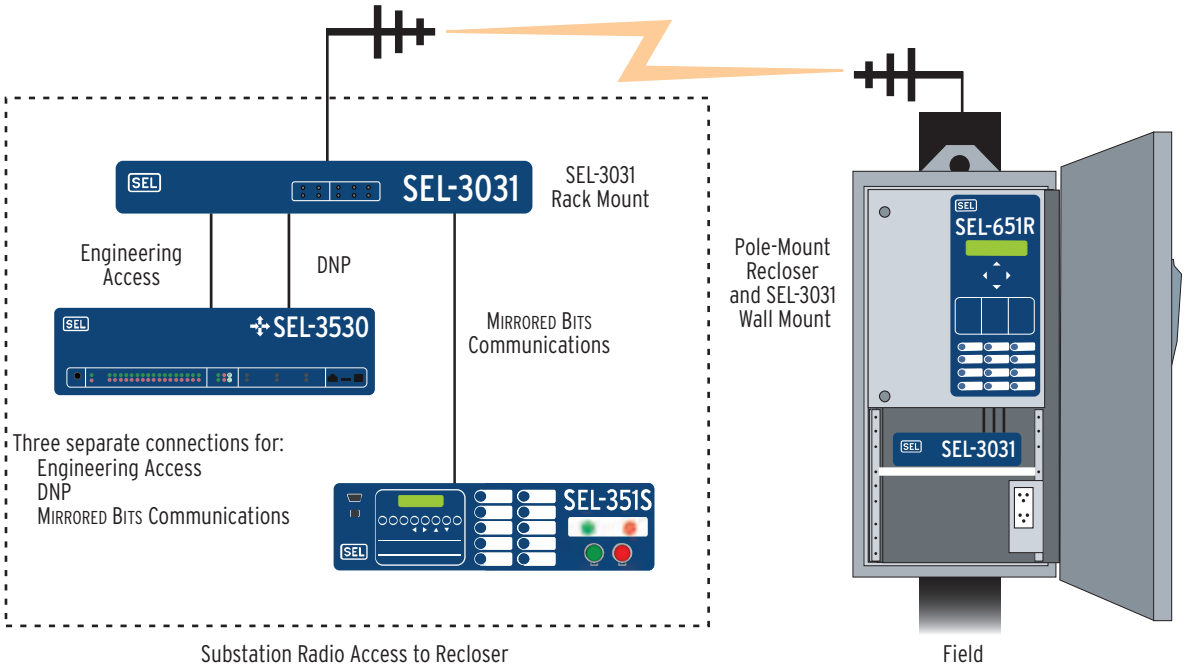

Figure 3 Product Overview

Remote Access Application

Many existing substations have no outside communication or use expensive, unreliable communication over leased lines. Other connection methods are often cost prohibitive or have right-of-way issues. One alternative is to use the SEL-3031 to send information to a local substation that has existing backhaul communications. *Figure 4* shows an example of how you can send information using the three serial ports on the radio. The SEL-3530 Real-Time Automation Controller (RTAC) concentrates all the data in the remote substation and using DNP3 or SEL Fast Messaging sends back data to the local substation. The first RTAC port has all of the SCADA data from the remote substation. Another serial port, also going into the SEL-3530, provides engineering access to obtain event reports or SER (sequential events recorder) from any of the relays. Use the third port to transfer synchrophasor messages back to the local substation. Synchrophasors are powerful tools to determine the phase angle and power flow between substations.

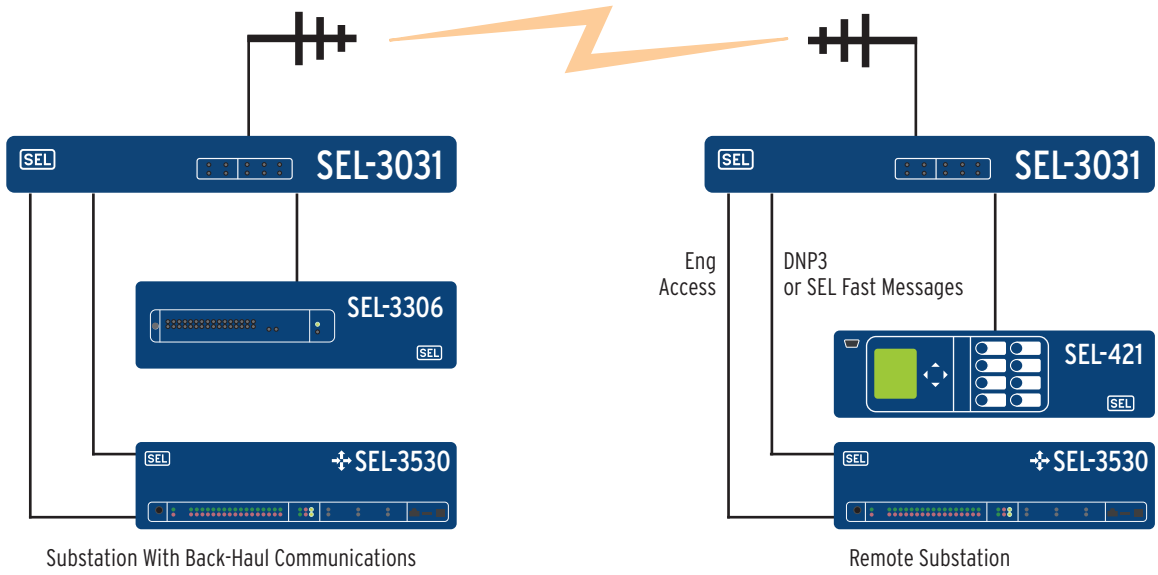

Figure 4 Remote Access

Short-Distance Wireless I/O Application

In large, new or existing substations it can be difficult and expensive to add wiring or communications links to sense and control remote I/O points. The SEL-3031 can be used in applications where you need to transfer I/O over a few hundred meters back to the control house. *Figure 5* demonstrates how you can use three SEL-2505 Remote I/O Modules to transmit the status of 24 inputs and control 24 outputs. All of this information is transferred using SEL MIRRORED BITS to an SEL-3530 RTAC. Adding the SEL-3044 Encryption Card to the SEL-3031 adds encryption for MIRRORED BITS.

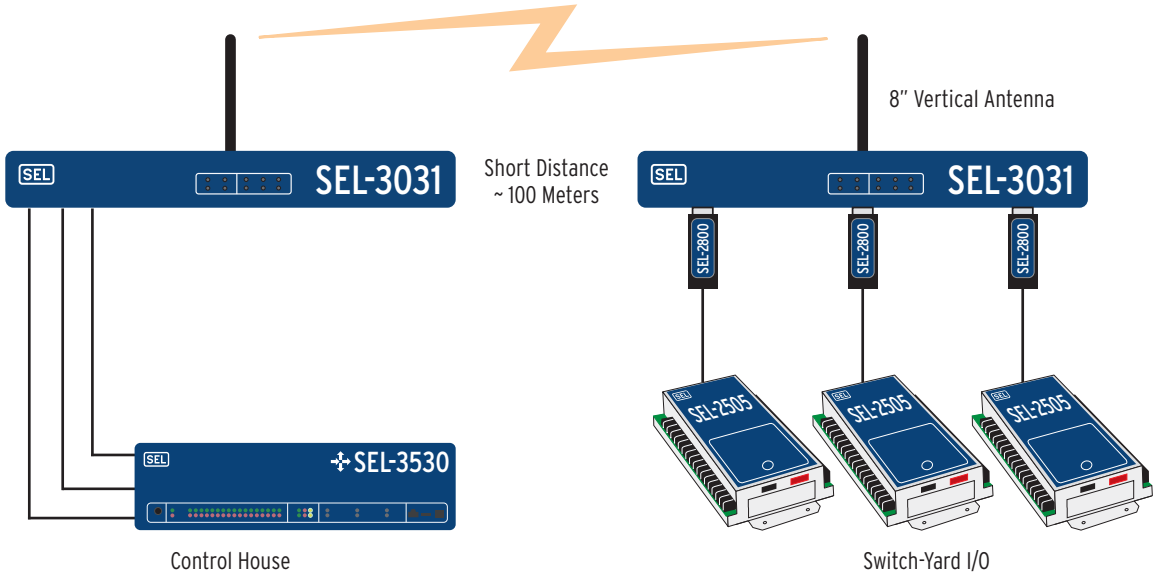

Figure 5 Short Distance Wireless I/O

SEL-3031 Point-to-Multipoint Applications

Point-to-Multipoint (P2MP) offers flexibility when data gathering is needed from one central location. P2MP mode is designed to work with DNP3 or MODBUS to create a master/slave hierarchy where one master polls many slaves. P2MP configurations are useful when non-time critical data is needed from many locations.

Metering and Control Application

Figure 6 shows how a common P2MP system would work using the SEL-3530 Real-Time Automation Controller (RTAC) as a data concentrator and SEL-651R as the remote devices. The RTAC transmits data to Port 1 of the Master SEL-3031. This data is wirelessly transmitted and received by all remote SEL-3031 radios. Each remote SEL-3031 transmits this message through port 1 to the connected SEL-651R. All SEL-651R devices will see this transmitted message. The SEL-651R that has the correct address contained in the transmitted message will communicate back to the RTAC.

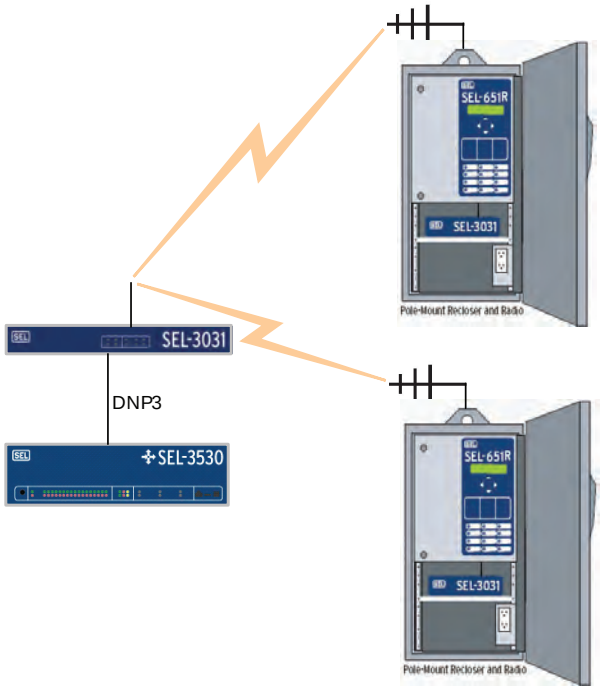

Figure 6 P2MP DNP3 SCADA Gathering

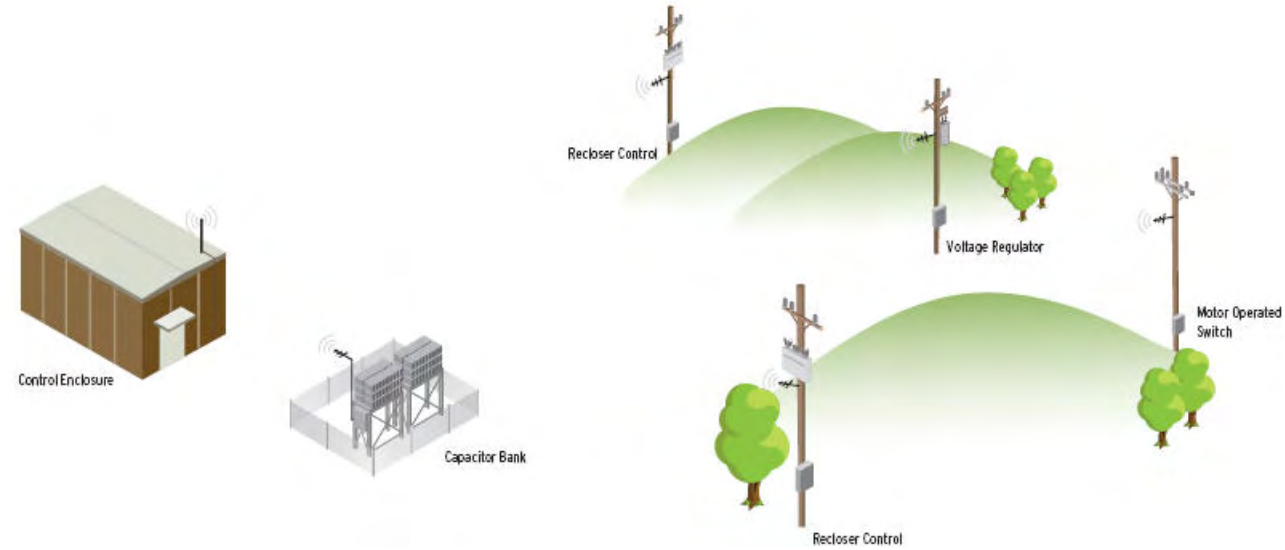

Figure 7 P2MP SCADA Data and Control

SEL-3031 Features

Indication and Function

The SEL-3031 front panel has 10 LEDs, as shown in *Figure 8*.

The **ENABLE** and **ALARM** LEDs provide radio system status updates and alerts should any hardware or software errors occur.

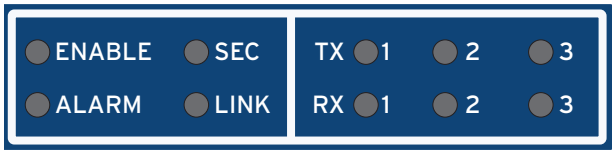

Figure 8 Front-Panel LED Status Indication

The **SEC** LED is a multifunction LED that displays the status of the SEL encryption card (SEC). The LED indicates whether the encryption card is connected or enabled, and whether the card is properly set.

The **LINK** LED aids in installation and illuminates when the radio is properly linked.

The six **TX/RX** LEDs show communications activity on each of the three serial ports.

The rear-panel standard radio configuration is three EIA-232 ports, as shown in *Figure 9*.

Figure 9 Rear Wall Mount

Port 1 can be ordered as EIA-232, EIA-485, or fiber-optic compatible with the SEL-2812.

The antenna connector is a standard TNC female connector. SEL offers a full line of antennas and antenna cables to meet your application needs. See the SEL-3031 Model Option Table (MOT) for more information on these accessories.

Protocol Support

The SEL-3031 requires minimal settings to function with popular industry protocols. In P2P mode, each serial port can support a variety of protocols, including DNP3, Modbus, MIRRORED BITS, IEEE C37.118 Synchrophasors, and SEL ASCII. You can use different protocols on different ports simultaneously. In P2MP mode, only port 1 is used and supports DNP3, MODBUS, or any other byte-oriented addressable protocol.

Encryption

The SEL-3031 can be ordered with an optional SEL encryption card. This card is a cryptographically-secure way to transmit sensitive data by radio in a P2P or P2MP network. Frequency-hopping, spread-spectrum communication is not sufficient to deter hackers. The encryption card provides 256-bit AES encryption and is FIPS 140-2 validated. The card can be ordered with the SEL-3031, or added later as a field upgrade.

Figure 10 SEL-3044 Encryption Card

The card provides data confidentiality by encrypting passwords and other sensitive data. The encryption card ensures that messages are not forged, modified, spliced, reordered, or replayed.

The local serial port connects to the device requiring data protection, e.g., SCADA, MIRRORED BITS, or RTU. The remote serial port connects through an untrusted wireless link to the other radio. The local interface exchanges plaintext (unencrypted) data between the protected device and the SEL-3031. The remote interface exchanges encrypted and/or authenticated data between the local and remote SEL-3031.

The serial port channel data speed is 19200 or 9600 bps when using the encryption card.

Configuration and Commissioning Software

The included ACSELERATOR QuickSet software program simplifies device configuration and supports the following commissioning and analysis functions for the SEL-3031:

- Accesses settings creation help online
- Organizes settings with the device database manager
- Loads and retrieves settings using a simple USB communications link
- Monitors radio signal strength and power output during installation
- Shows radio link and frequency zone availability statistics

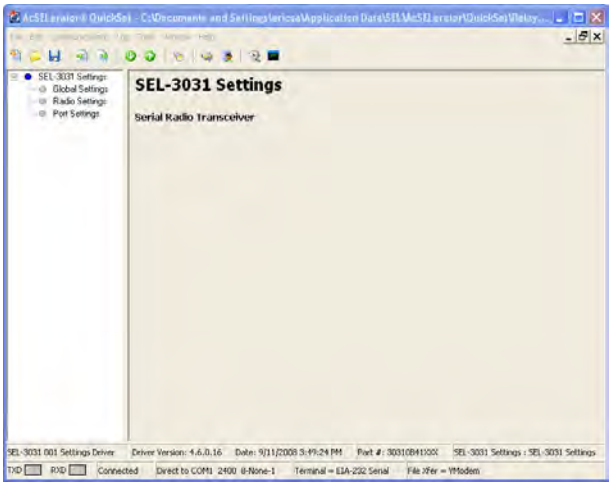

Figure 11 ACSELERATOR QuickSet SEL-5030 Software

Guideform Specification

The microprocessor-based radio shall provide wireless serial communication over long distances. Self-checking functions shall be included. Specific requirements follow.

- **Front-Panel Visualization.** The radio shall display device status, connections links, serial port activity, and data security.
- **IRIG-B Synchronized, Time-Stamped Events.** The radio shall store event records and status logs with IRIG-B synchronized time stamps. An internal real-time clock can be used for time-stamping if an IRIG-B signal is not available.
- **P2P and P2MP Operation Modes.** The radio shall be able to operate in either P2P or P2MP modes. In P2P mode all three serial ports are used. In P2MP only port 1 is used.
- **Three Separate Channels of Serial Communication.** The radio shall communicate three separate serial communication connections on one radio in point-to-point mode.
- **Protocol Support.** The radio shall support DNP3, Modbus, SEL ASCII, IEEE C37.118, and SEL MIRRORED BITS protocols on all serial ports.
- **Wireless Connection.** The radio shall use the 900-MHz ISM band using frequency-hopping and spread-spectrum technology to maximize channel availability.
- **Encryption.** The radio shall encrypt data in point-to-point networks using hardened 256-bit AES encryption. Encryption shall be available as an ordering option or added as a field upgrade.
- **Collocated Radio Synchronization.** The radio shall be able to synchronize hops of multiple collocated radio systems operating at the same location to prevent adjacent noise interference.
- **PC Software.** The radio shall be compatible with PC software that programs settings and aids in installation. The PC interface can be used to set the radio offline or directly through a USB port.
- **Operating Temperature.** The radio shall operate over a temperature range of –40° to +85°C.
- **Mounting Options.** The radio shall be available in multiple mounting configurations to meet end-user needs, including rack-mount, wall-mount, and NEMA 3R outdoor enclosure configurations.
  - **Wall-Mount.** The radio shall be available with a wall-mount configuration, powered by 9–30 Vdc.
  - **Rack-Mount.** The radio shall be available with a rack-mount configuration, with an internal power supply rated for 24/48 Vdc or 125/250 Vac or Vdc.
  - **Outdoor Enclosure.** The radio shall be available as a NEMA 3R outdoor enclosure configuration. The enclosure shall have a 125/250 Vac or Vdc power supply with an optional 12-V battery charger system.
- **Specification Compliance.** The radio shall be type-tested to C37.90, IEEE 1613, IEC 30255, IEC 60068, FCC Part 15.247, and IEC 61000 standards.
- **Warranty.** The radio shall have a minimum ten-year warranty.

Mechanical Diagrams and Dimensions

Figure 12 SEL-3031 Rack-Mount Front Panel

Figure 13 SEL-3031 Rack-Mount Rear Panel

Figure 14 SEL-3031 Wall-Mount Front Panel

Figure 15 SEL-3031 Wall-Mount Rear Panel

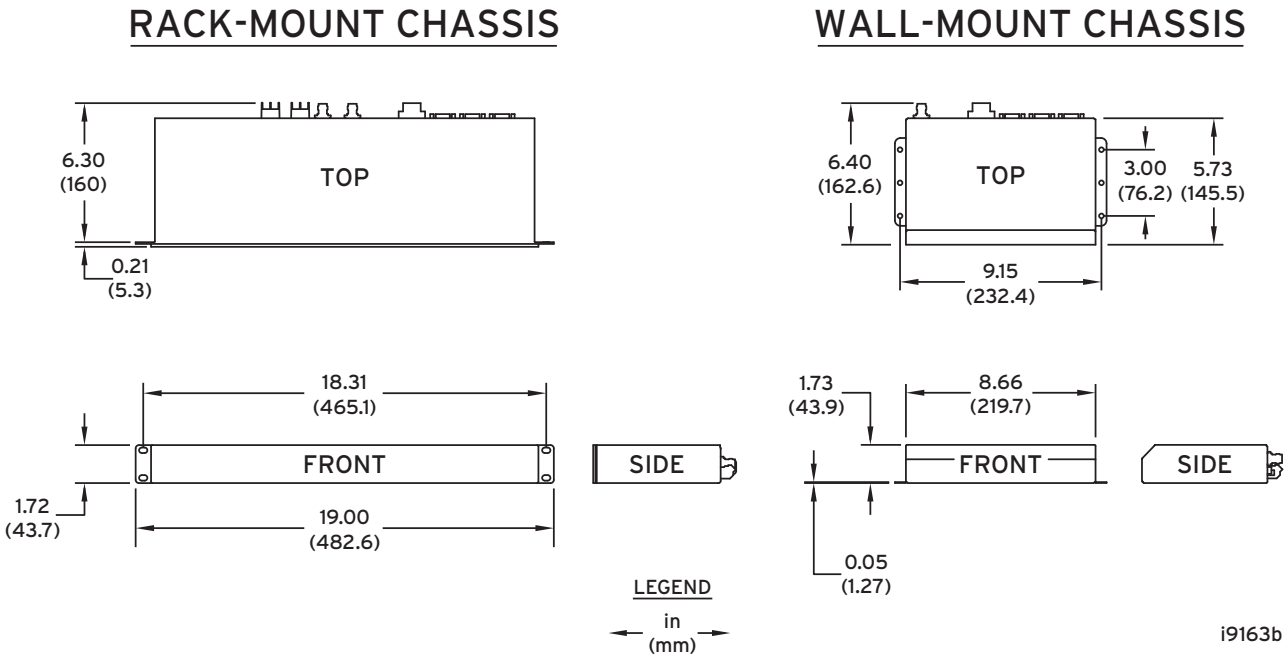

Figure 16 Rack- and Wall-Mount Dimensions

Specifications

Compliance

UL, cUL: UL 508, CSA C22.2 No. 142
SEL-3044 Encryption Card
FIPS 140-2 validated
ISO 9001:2008 Certified
Also see *Table 1*.

General

Temperature Range

–40° to +85°C per IEC 60068-2-1 and 60068-2-2

Operating Environment

Pollution Degree:	2
Relative Humidity:	5–95%, noncondensing
Maximum Altitude:	2000 m

Dimensions

Wall Mount:	43.9 mm x 219.7 mm x 162.6 mm (1.73 in x 8.66 in x 6.40 in)
Rack Mount:	43.7 mm x 482.6 mm x 160.0 mm (1.72 in x 19.00 in x 6.3 in)

Time-Code Input

Port 2, Pins 4 and 6

Format:	Demodulated IRIG-B
Input Impedance:	333 Ω
Accuracy:	± 5 milliseconds

Alarm Contact

Form B Contact

(open when energized and passes diagnostics)

Operating Voltage:	250 Vdc or 190 Vac
Dielectric Test Voltage:	500 Vrms
Continuous Carry:	6 A

Communications

Communications Ports

Serial Port 1

Data Speed Without Encryption Card:	38400 bps (disables Port 2), 19200 bps, or 9600 bps
Data Speed With Encryption Card:	19200 bps (disables Port 2) or 9600 bps

EIA-232, EIA-485 (ordering option)

Connector:	9-Pin Subminiature D

Fiber-Optic Ordering Option

Connectors:	2 ST (Tx and Rx)
Encoding SEL-2812/SEL-9220 Compatible	
Wavelength:	850 nm multimode
Typical Tx Power:	–13 dBm
Min. Rx Sensitivity:	–29 dBm
Optical Budget:	16 dB
Compatible Fiber-Optic Core Diameter:	50, 62.5, or 200 µm

Serial Port 2, 3 Standard EIA-232

Data Speed Without Encryption Card:	19200 bps or 9600 bps
Data Speed With Encryption Card:	9600 bps
Connector:	9-Pin Subminiature D

Protocols

Modbus, DNP3, SEL MIRRORED BITS Communications (MB8), ACSELERATOR QuickSet SEL-5030 Software Support, SEL ASCII and Compressed ASCII, SEL Fast Messaging, IEEE C37.118 Synchrophasors

Typical Latency

SEL-3031

MIRRORED BITS:	8.9 ms at 9600 bps 5.6 ms at 19200 bps 4.8 ms at 38400 bps
Standard:	4.9 ms at 9600 bps 4.3 ms at 19200 bps 3.8 ms at 38400 bps

SEL-3031 With SEL-3044 Encryption Card

MIRRORED BITS:	9.7 ms at 9600 bps 7.4 ms at 19200 bps
Standard:	5.7 ms at 9600 bps 5.3 ms at 19200 bps

Radio

Transmitter

Frequency Band:	902–928 MHz ISM band
Modulation:	GFSK
Operating Mode:	Point-to-Point
RF Connector:	TNC
Power Output:	1 W (30 dBm) to 100 mW (20 dBm) in steps of 1 dBm
Channel Bandwidth:	250 kHz

Receiver

Sensitivity:	–97 dBm, –104 dBi with ARQ on
Bit Error Rate (BER):	$<10^{-6}$ at –97 dBm
Distance:	20 miles, line of sight
Error Detection:	32-bit CRC

Power Supply

Rated Supply Voltage

Wall-Mount Model:	12/24 Vdc
Low-Voltage Model:	24/48 Vdc
High-Voltage Model:	125/250 Vdc 110/240 Vac, 50/60 Hz

Input Voltage Range

Wall-Mount Model:	9–30 Vdc
Low-Voltage Model:	18–60 Vdc
High-Voltage Model:	85–275 Vdc; 85–264 Vac

Power Consumption

Wall Mount:	< 5 W
Rack Mount:	< 7 W

Power Consumption With SEL-3044 Card

Wall Mount:	< 6 W
Rack Mount:	< 8 W

Type Tests

Communications Equipment Tests

IEEE 1613-2003

Environmental Tests

Enclosure Protection:	IEC 60529:2001
Vibration Resistance:	IEC 60255-21-1:1988 Class 1 Endurance, Class 2 Response IEC 60255-21-3:1993 Class 2
Shock Resistance:	IEC 60255-21-2:1988 Class 1 shock withstand, bump, Class 2 shock response
Cold:	IEC 60068-2-1:2007 –40°C, 16 hours
Damp Heat, Cyclic:	IEC 60068-2-30:2005 25–55°C, 6 cycles, 95% relative humidity
Dry Heat:	IEC 60068-2-2:2007 +85°C, 16 hours

Dielectric Strength and Impulse Tests

Dielectric (HiPot):	IEC 60255-5:2000 IEEE C37.90–2005
Impulse:	IEC 60255-5:2000 0.5 J, 5 kV

RFI and Interference Tests

EMC Immunity

Standard:	IEEE 1613, Class 2
Electrostatic Discharge:	IEC 61000-4-2:2008 Severity Level 4 8 kV contact discharge 15 kV air discharge IEEE C37.90.3–2001 Severity Level 4 8 kV contact discharge 15 kV air discharge
Radiated RF Immunity:	IEC 61000-4-3:2008 10 V/m IEEE C37.90.2–2004 35 V/m
Fast Transient, Burst Immunity:	IEC 61000-4-4:2004 4 kV @ 2.5 kHz, and 5.0 kHz for communications ports, power supply, alarm contacts
Surge Withstand Capability Immunity:	IEC 60255-22-1:2007 2.5 kV common-mode, 1 kV differential-mode IEEE C37.90.1–2002 2.5 kV oscillatory, 4 kV fast transient for communications ports, power supply, alarm contacts
Conducted RF Immunity:	IEC 61000-4-6:2008 10 Vrms
Digital Radio Telephone RF Immunity:	ENV 50204-1995 Severity Level 10 V/m at 900 MHz and 1.89 GHz

EMC Emissions

Radiated Emissions

FCC Part 15.247; ICES-001; RSS-210

This device complies with Part 15 of the FCC rules. Operation is subject to the following two conditions:

1. This device may not cause harmful interference, and
2. This device must accept any interference received, including interference that may cause undesired operation.

FCC Part 15, Class A; ICES-003

Note: This equipment has been tested and found to comply with the limits for a Class A digital device, pursuant to Part 15 of the FCC Rules. These limits are designed to provide reasonable protection against harmful interference when the equipment is operated in a commercial environment.

This equipment generates, uses, and can radiate radio frequency energy and, if not installed and used in accordance with the instruction manual, may cause harmful interference to radio communications.

Operation of this equipment in a residential area is likely to cause harmful interference in which case the user will be required to correct the interference at his own expense.

FCC Section 15.21

Users manual for an intentional or unintentional radiator shall caution the user that changes or modifications not expressly approved by the party responsible for compliance could void the user's authority to operate the equipment.

Table 1 Government Approvals

Country	Authority	Reference	Part Number Starts With
USA and Colombia	FCC	ID: R34SEL-3031	3031
Canada	IC	4468A - SEL3031	3031
Mexico	COFETEL	RCPSCE10 - 0574	3031
Brazil	ANATEL	ID: 2671-11-7001 EAN: (01)07898936514 02 8	30311

Notes

© 2010–2015 by Schweitzer Engineering Laboratories, Inc. All rights reserved.

All brand or product names appearing in this document are the trademark or registered trademark of their respective holders. No SEL trademarks may be used without written permission. SEL products appearing in this document may be covered by U.S. and Foreign patents.

Schweitzer Engineering Laboratories, Inc. reserves all rights and benefits afforded under federal and international copyright and patent laws in its products, including without limitation software, firmware, and documentation.

The information in this document is provided for informational use only and is subject to change without notice. Schweitzer Engineering Laboratories, Inc. has approved only the English language document.

This product is covered by the standard SEL 10-year warranty. For warranty details, visit www.selinc.com or contact your customer service representative.

SCHWEITZER ENGINEERING LABORATORIES
2350 NE Hopkins Court • Pullman, WA 99163-5603 USA
Phone: +1.509.332.1890 • Fax: +1.509.332.7990
Internet: www.selinc.com • E-mail: info@selinc.com

PDS3031-01